YOYO
YOE126118/1CR

NOBILI



SPECIFICATIONS
Energy saving single control
Cromo polished
Anti limescale aerator M 24 x 1, flow rate 5 l/min
1 1/4” waste with patented SNAP system
ø 3/8” stainless steel flexible pipe
Energy saving system with cold water side opening
50% two step cartridge for water saving
Packaging: 41,5 x 16 x 7,5 cm / 0,00498 m^3 / 1,64 kg

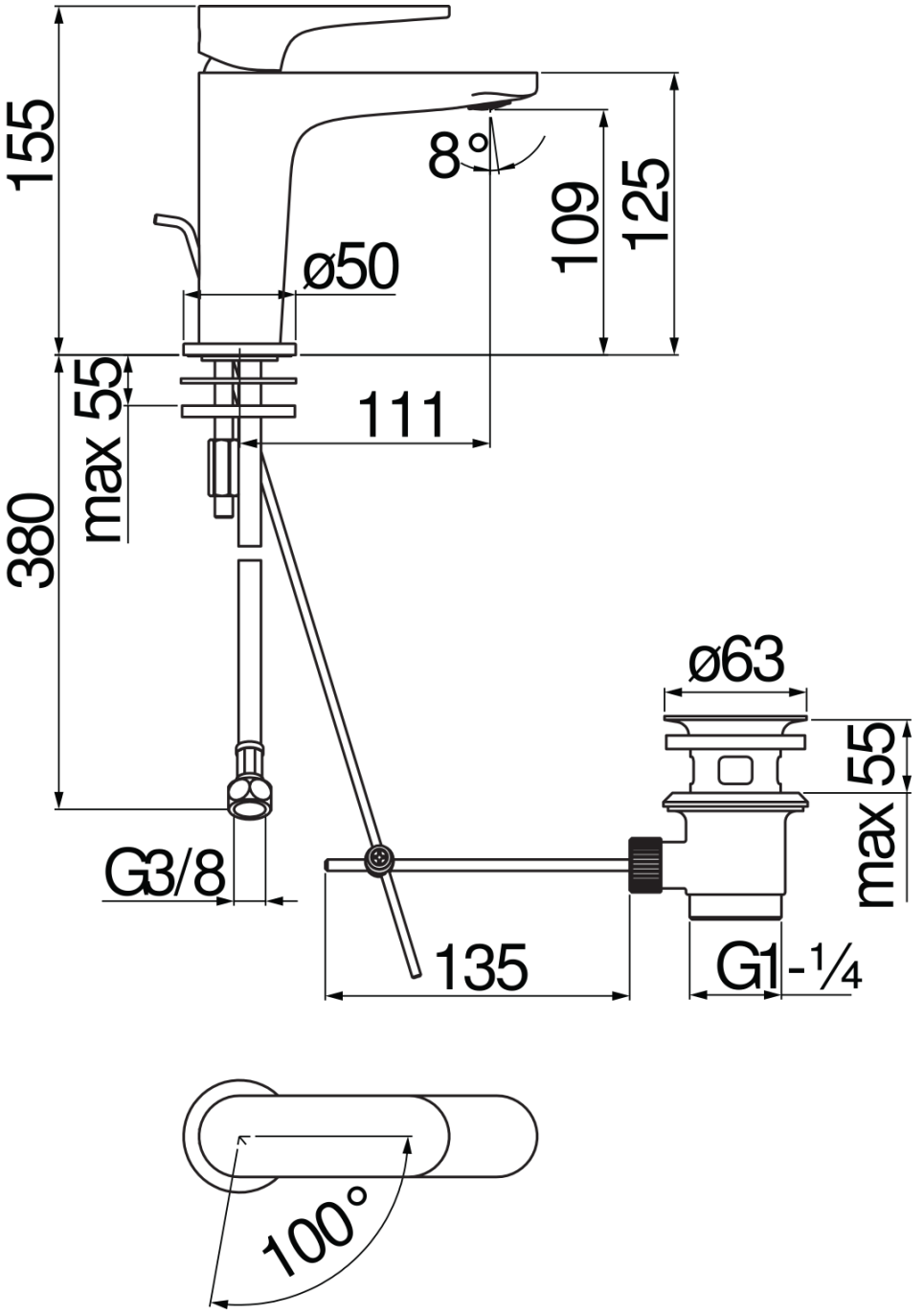
155
8°
109
125
ø50
max 55
111
380
ø63
55
max
G3/8
135
G1-¼
100°

FLOW RATE DIAGRAM: HOT/COLD WATER

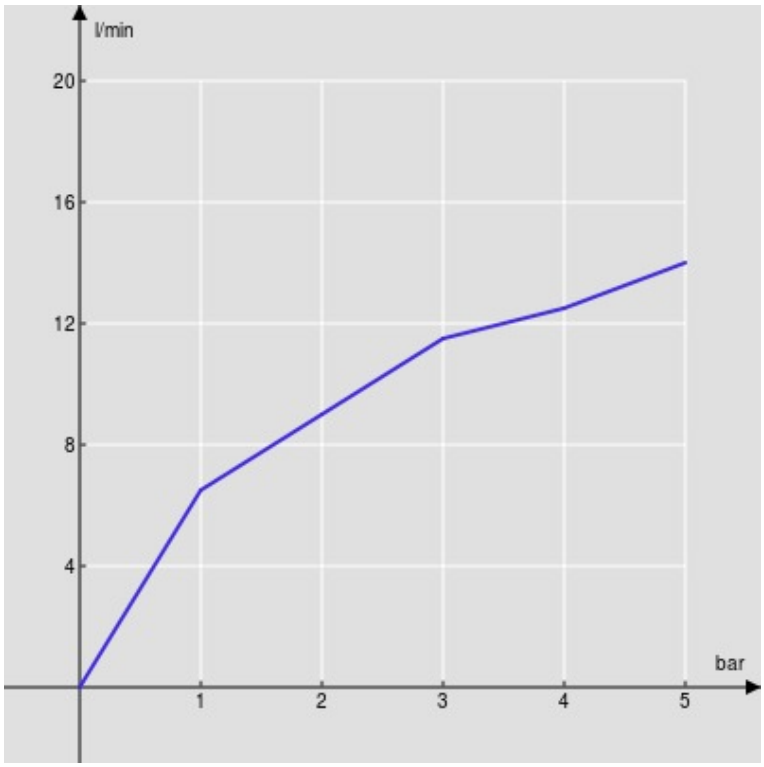

Aerator

FLOW RATE DIAGRAM: MIXED WATER

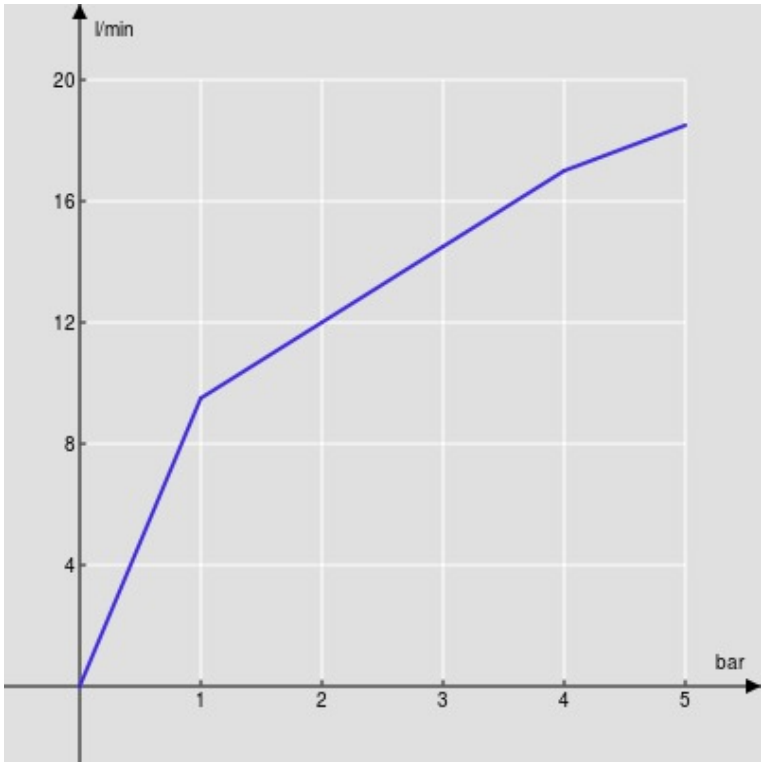

Aerator